SPECIFICATION SHEET

PROJECT No:

"IC" TYPE HOUSING

ISCA3600

yes

Voltage **120 VOLTS**

PAR20 50W max.

TºC 125ºC No 032

Double top **no**

UL number **E 174023**

E Electronic **M** Magnetic **C** Short **L** Long

AIR TIGHT HOUSING

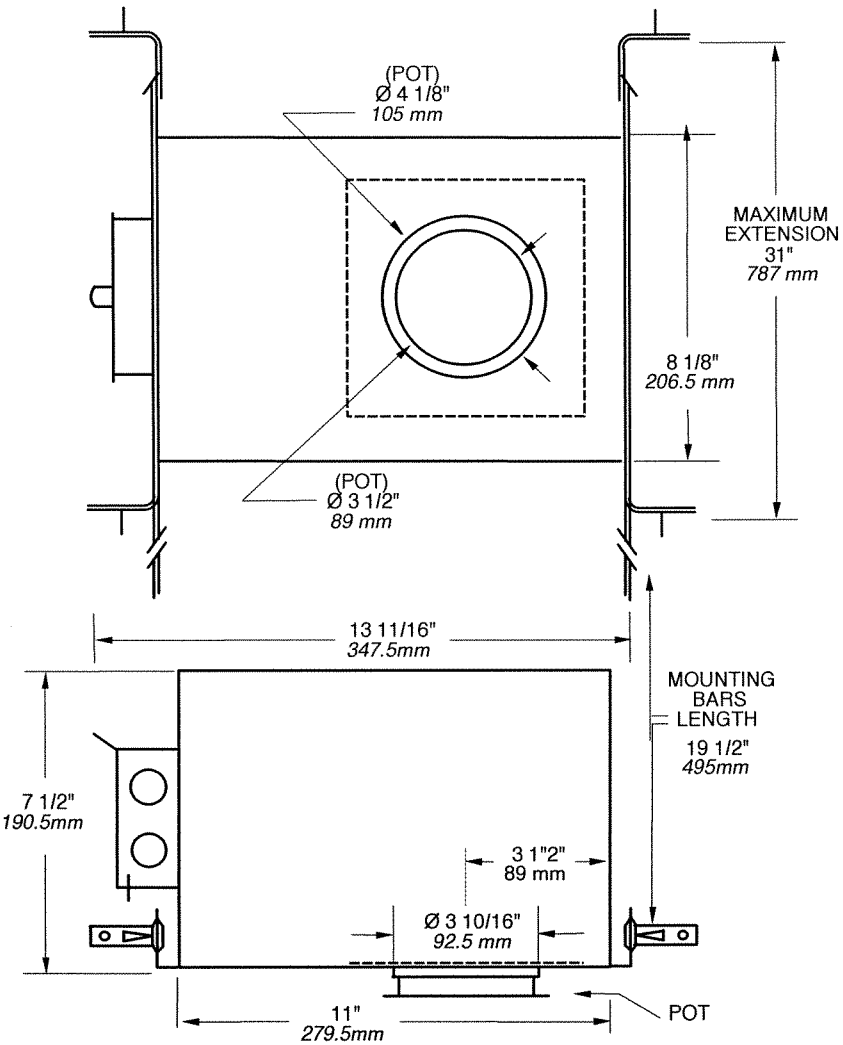

OD Cut : **3 3/4" (95 mm)**

NOTES: For ceiling with insulation
Below ceiling access

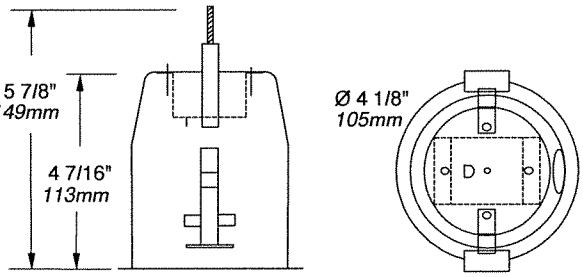

C US

C UL US

LISTED

Certified UL Standards

PROJECT

Your Project: _____

Representative: _____

CONTRAST LIGHTING

1009, rue du Parc Industriel. Saint-Jean-Chrysostome, Quebec. CANADA G6Z 1C5 Tel.: (418) 839-4624
Toll free fax : 1-877-839-7057 Email : infos@contrastlighting.com Website : www.contrastlighting.com

06 2005